Hi-MO X10 Scientist

LR7-54HVH

480~500M

- Suitable for Distribution Market
- Highest efficiency with the best energy generation performance
- TaiRay wafer & BC technology enhances high product reliability
- Smart manufacturing & LONGi product lifecycle standards deliver exceptional product quality

25 25-year Warranty for Materials and Processing
Specifically for the UK & Irishmarket*

30 30-year Warranty for Extra Linear Power Output

Complete System and Product Certifications

IEC 61215, IEC 61730
ISO9001: Quality Management System
ISO14001: Environment Management System
ISO45001: Occupational Health and Safety
IEC62941: Guideline for module design qualification and type approval

LONGi

THE smarter AWARD

Hi-MO X10 Scientist

LR7-54HVH 480~500M

24.5%	0~3%	<1%	0.35%	BC-CELL
MAX MODULE EFFICIENCY	POWER TOLERANCE	FIRST YEAR POWER DEGRADATION	YEAR 2-30 POWER DEGRADATION	LOWER OPERATING TEMPERATURE

Additional Value

30-Year Power Warranty

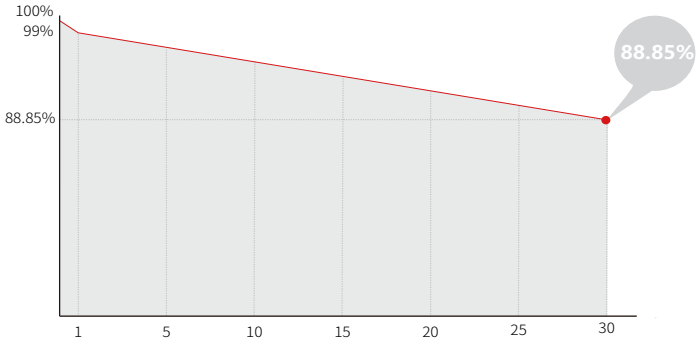

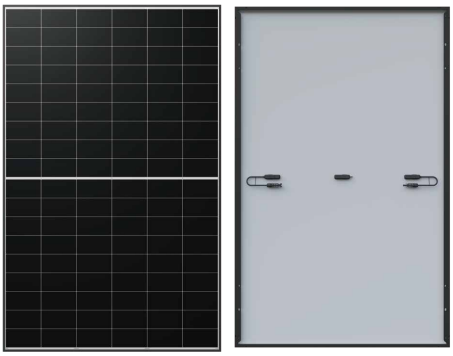

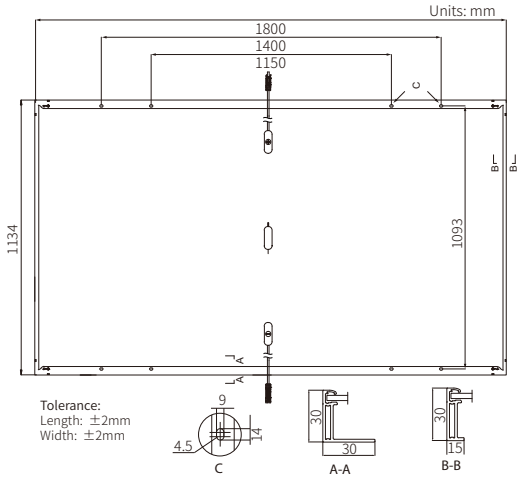

Mechanical Parameters

Cell Orientation	108 (6×18)
Junction Box	IP68, three diodes
Output Cable	4mm², +400, -200mm/±1200mm length can be customized
Glass	Single glass, 3.2mm coated tempered glass
Frame	Anodized aluminum alloy frame
Weight	21.6kg
Dimension	1800×1134×30mm
Packaging	36pcs per pallet / 216pcs per 20' GP / 864pcs per 40' HC

Electrical Characteristics

STC : AM1.5 1000W/m² 25°C NOCT : AM1.5 800W/m² 20°C 1m/s Test uncertainty for Pmax: ±3%

Module Type	LR7-54HVH-480M		LR7-54HVH-485M		LR7-54HVH-490M		LR7-54HVH-495M		LR7-54HVH-500M	
Testing Condition	STC	NOCT	STC	NOCT	STC	NOCT	STC	NOCT	STC	NOCT
Maximum Power (Pmax/W)	480	365	485	369	490	373	495	377	500	381
Open Circuit Voltage (Voc/V)	40.29	38.29	40.40	38.39	40.52	38.51	40.64	38.62	40.75	38.72
Short Circuit Current (Isc/A)	15.13	12.16	15.23	12.24	15.33	12.32	15.43	12.40	15.53	12.48
Voltage at Maximum Power (Vmp/V)	33.28	31.63	33.40	31.74	33.51	31.85	33.62	31.95	33.73	32.06
Current at Maximum Power (Imp/A)	14.43	11.57	14.53	11.65	14.63	11.73	14.73	11.81	14.83	11.89
Module Efficiency(%)	23.5		23.8		24.0		24.3		24.5	

Operating Parameters

Operational Temperature	-40°C ~ +85°C
Power Output Tolerance	0 ~ 3%
Maximum System Voltage	DC1500V (IEC)
Maximum Series Fuse Rating	25A
Nominal Operating Cell Temperature	45±2°C
Protection Class	Class II
Fire Rating	IEC Class C

Mechanical Loading

Front Side Maximum Static Loading	5400Pa
Rear Side Maximum Static Loading	2400Pa
Hailstone Test	25mm Hailstone at the speed of 23m/s

Temperature Ratings (STC)

Temperature Coefficient of Isc	+0.050%/°C
Temperature Coefficient of Voc	-0.200%/°C
Temperature Coefficient of Pmax	-0.260%/°C

LONGi

Specifications included in this datasheet are subject to change without notice.
LONGi reserves the right of final interpretation. (BGV02 20250704)